INNOVATION LEADS TO VALUE



SUNWARD

SWDM165 ROTARY DRILLING RIG

EN.25.08

INNOVATION LEADS TO VALUE
ROTARY DRILLING RIG
SWDM165



SUNWARD

SUNWARD AUSTRALIA PTY LTD

Address:16-18 Hydrive Close Dandenong South VIC 3175
www.sunward.au
australia@sunward.cc
Tell:0389070059

SUNWARD

SWDM165

MAIN TECHNICAL FEATURES

MAX. DRILLING DIAMETER:
1500 / 1300 mm(CCS&WCS)

MAX. DRILLING DEPTH:
60 m

MAX. TORQUE:
165 kN·m

ENGINE:
EU stage Ⅴ / US EPA Tire 4F :
186 kW @ 2000 rpm
EU stage Ⅲ: 194 kW @ 2200 rpm

MAX. HEIGHT:
19.4 m

OPERATING WEIGHT:
47 t

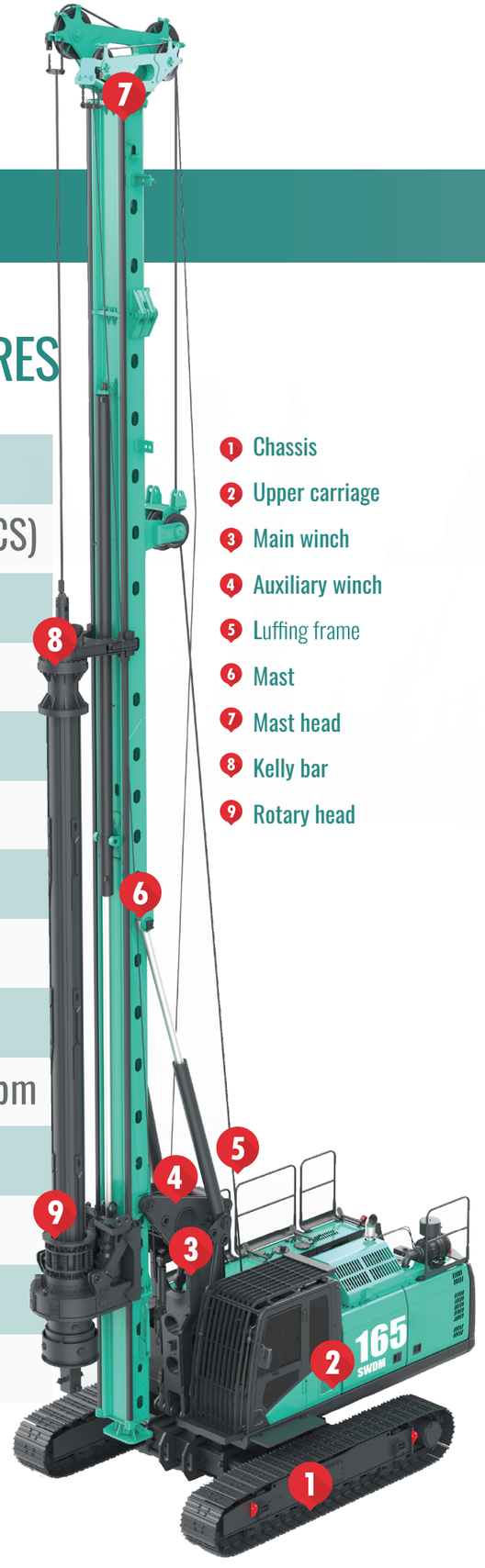

1. Chassis
2. Upper carriage
3. Main winch
4. Auxiliary winch
5. Luffing frame
6. Mast
7. Mast head
8. Kelly bar
9. Rotary head

HIGHLIGHTS

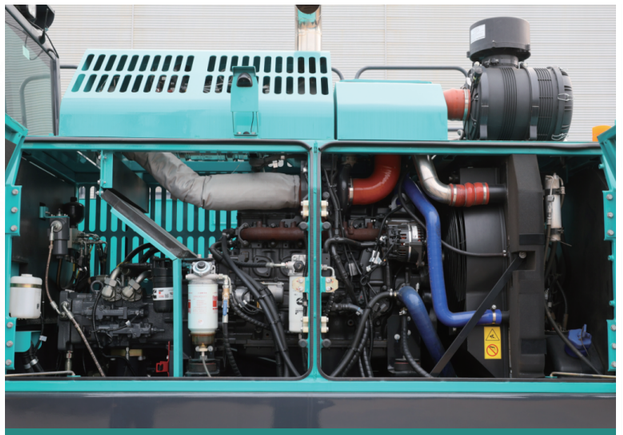

EFFICIENT, POWERFUL AND RELIABLE ENGINE

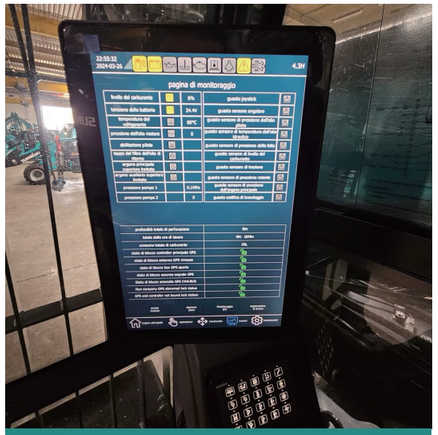

MULTI-LANGUAGE SUPPORT, VERSATILE FUNCTIONS, MACHINE MONITORING, DIAGNOSTICS

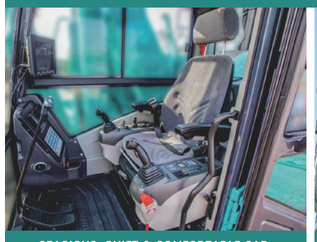

SPACIOUS, QUIET & COMFORTABLE CAB WITH A USER-FRIENDLY CONTROL SYSTEM



FULL-VIEW CAMERA, EMERGENCY STOP SWITCH, GUARDRAIL AND OTHER SAFETY DEVICES



ELECTRICAL SYSTEM:
1.ONE-TOUCH CASING EXTRACTION
2.ONE-TOUCH SOIL THROWING
3.ONE-TOUCH LIFTING
4.ROCK ENTRY MODE
5.ROTATION RESET

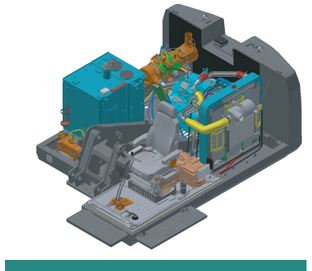

SMART LAYOUT☒
EASY MAINTENANCE

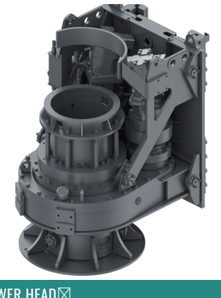

POWER HEAD☒
STANDARD WITH HIGH-SPEED SOIL THROWING☒ DRIVE KEY STRIP IS EASY TO MAINTAIN
ACCUMULATOR IMPACT PROTECTION SEAL, EXTENDING THE LIFE OF THE POWER HEAD MOTOR



SWDM165 has been designed to work in LDP and CFA configurations, in very demanding job sites, where high performing machines are needed.
Designed for faster and effective set up on site including Quick **conversion from LDP to CFA, and a 4-Line CFA option. Beside the weight, it can be transported with low cost considering its dimension.**

- **Efficiency & Productivity**
  Improved performance and functionality with many automatic solutions to simplify and protect the operator's job.
  Powerful engine, high performing rotary head, fast and powerful winches, are the key to improve efficiency and productivity onsite.

- **Environment Protections**
  Powerful Cummins Diesel Engine EU stage V / US EPA Tier 4f, with auto idle control system for fuel saving and low noise emission level, one of the lowest in its category.

- **SUNWARD Aftersales Quality System**
  In Sunward we believe that a proactive and efficient after-sales organization is playing a pivotal role in our customers' success. This is the reason we **globally invested in spare parts stock and skilled service engineers. Thanks to our Sunward Drill System, an electronic system for drilling equipment control, production supervision and fleet management, we can support our customers in their daily operations and trouble shootings onsite, wherever they are in the world.**

6 MACHINE KEY FEATURES

SPECIALIZED CHASSIS

HIGH EFFICIENCY

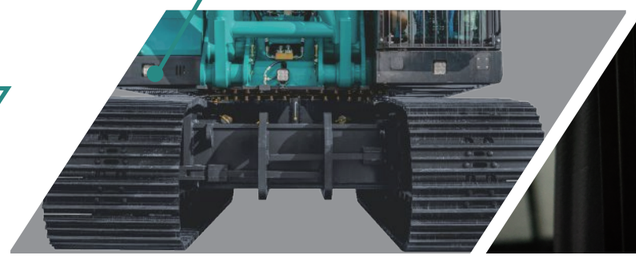



INTELLIGENT CONTROL

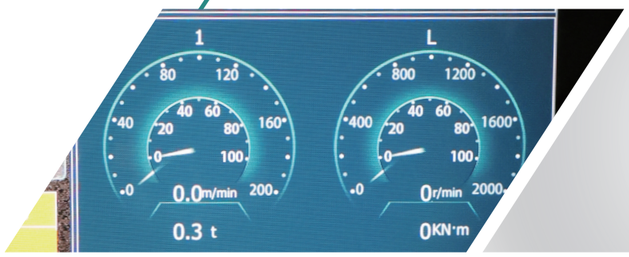

SUNWARD

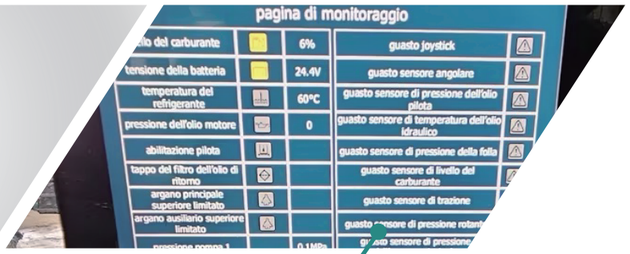



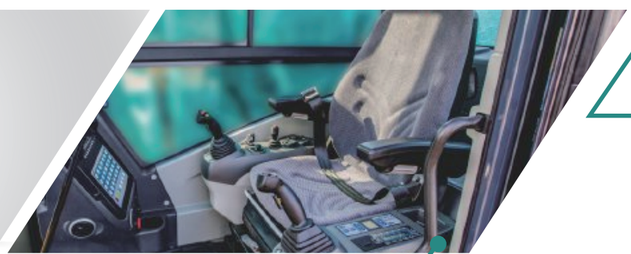

SUNWARD ONLINE CLOUD

DIGITIZATION

OPERATION FRIENDLY

SWDM165 TECHNICAL PARAMETER

UNDERCARRIAGE

OVERALL WIDTH WITH RETRACTED CRAWLERS	2550 mm	8 ft 4 in
OVERALL WIDTH WITH EXTENDED CRAWLERS	3800 mm	12 ft 5.6 in
WIDTH OF TRIPLE GROUSER TRACK SHOES	600 mm	1 ft 11.6 in
OVERALL LENGTH OF CRAWLERS	4647 mm	15 ft 3 in
TRACTION FORCE (EFFECTIVE / NOMINAL)	330 / 390 kN	74,190 / 87,640 lbf
TRAVELLING SPEED	1.78 km/h	1.11 mph

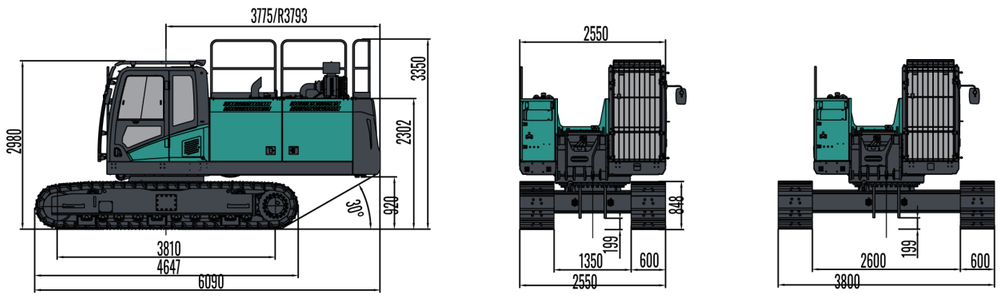

ENGINE

ENGINE MODEL	Cummins QSB6.7	Cummins B7
POWER RATING	186 kW @ 2000 rpm	194 kW @ 2200 rpm
ENGINE EMISSION	EU stage V /US EPA Tire 4f	EU stage III
FUEL TANK CAPACITY	372 L	372 L
AD BLUE TANK CAPACITY	31 L	/

HYDRAULIC SYSTEM

MAIN PUMPS FLOW @1900 RPM	2X247 L/min	2X247 L/min
HYDRAULIC OIL TANK CAPACITY	380 L	380 L
HYDRAULIC PRESSURE	320 bar	4,641 psi

ROTARY HEAD

MAX. NOMINAL TORQUE	165 kN.m	121,650 lbf·ft
SPEED OF ROTATION	6~34 rpm	6~34 rpm
SPIN OFF SPEED	/	/
WEIGHT	3.5 t	7,717 lb

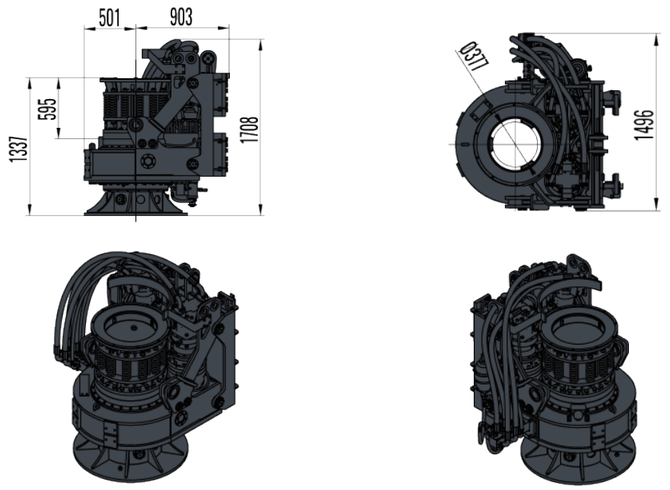

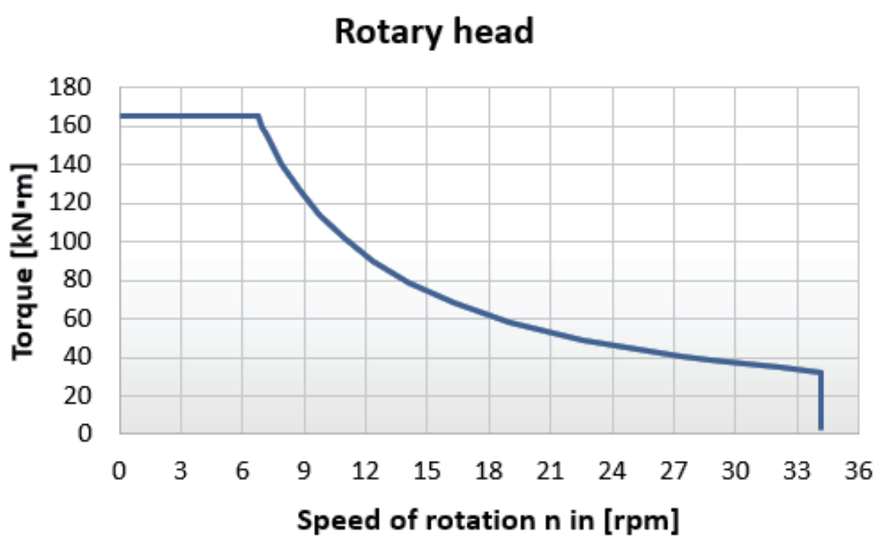

SWDM165 TECHNICAL PARAMETER

MAIN WINCH

FIRST LAYER LINE PULL (EFFECTIVE)	180 kN	40,465 lbf
LINE SPEED (MAX.)	65 m/min	213.3 ft/min
ROPE DIAMETER	28 mm	1.1 in

AUXILIARY WINCH

FIRST LAYER LINE PULL (EFFECTIVE)	60 kN	13,488 lbf
LINE SPEED (MAX.)	67 m/min	219.8 ft/min
ROPE DIAMETER	16 mm	0.63 in

NOISE EMISSION

SOUND PRESSURE LEVEL IN CABIN – STAGE V (EN 16228, ANNEX B)	LPA 78 db	LPA 78 db
SOUND POWER LEVEL (2000/14/EC AND EN 16228, ANNEX B)	LWA 113 db	LWA 113 db

CYLINDER CROWD SYSTEM

STROKE	5800 mm	19 ft 0.3 in
CROWD FORCE PULL (NOMINAL)	210 kN	47,210 lbf
CROWD FORCE PUSH	160 kN	35,970 lbf
SPEED UP (MAX.)	14.5 m/min	47.6 ft/min
SPEED DOWN (MAX.)	7 m/min	23 ft/min

WINCH CROWD SYSTEM

STROKE	13800 mm	45 ft 3.3 in
CROWD FORCE PULL (NOMINAL)	240 kN	53,950 lbf
CROWD FORCE PUSH (NOMINAL)	240 kN	53,950 lbf
SPEED UP (MAX.)	30 m/min	98.4 ft/min
SPEED DOWN (MAX.)	30 m/min	98.4 ft/min
ROPE DIAMETER	22 mm	0.87 in

SWDM165 STANDARD CONFIGURATION & OPTIONS

NOTE: ●STANDARD; ○OPTION;	CCS	WCS	QUICK CHANGE	4 TIMES
UNDERCARRIAGE				
VARIABLE GAUGE, TELESCOPIC SIDE FRAMES	●	●	●	●
MACHINE ANCHOR POINTS FOR TRANSPORT	●	●	●	●
UPPER STRUCTURE				
ON-BOARD LIGHTING SYSTEM LED	●	●	●	●
AIR-CONDITIONING SYSTEM	●	●	●	●
AIR-CUSHIONED OPERATOR'S SEAT (NO SEAT HEATING)	●	●	●	●
PROTECTIVE ROOF GUARD	●	●	●	●
ENGINE DIAGNOSTIC SYSTEM	●	●	●	●
FRONT PROTECTIVE GRILLE	●	●	●	●
PANORAMIC CAMERA	●	●	●	●
LIGHTING SYSTEM IN FRONT OF THE JOB	●	●	●	●
ROTARY HEAD				
ROTATE HIGH SPEED	●	●		
TRIGGER PLATE	●	○		
CARDANIC JOINT	○	●		
EXCHANGEABLE KELLY DRIVE KEYS	●	●	●	●
MEASURING AND CONTROL EQUIPMENT				
MAST INCLINATION MEASUREMENT ON X/Y AXES	●	●	●	●
AUTOMATIC VERTICAL ALIGNMENT OF MAST	○	○	○	○
ELECTRIC LOAD SENSING ON MAIN ROPE	●	●	●	●
SPEED SENSING DEVICE ON ROTARY DRIVE	●	●	●	●
AUTOMATIC CROWD CONTROL	●	●	●	●
CASING EXTRACTION ASSISTANT		●		
SLEWING ANGLE DISPLAY FOR UPPER CARRIAGE	●	●	●	●
ATTACHMENT				
H-TYPE KINEMATIC SYSTEM	●	●	●	●
SWIVEL FOR MAIN ROPE	●	●		
CFA KIT	○	○	●	●
UPPER KELLY GUIDE	●	●		

SWDM165 WORKING DIMENSION

CCS

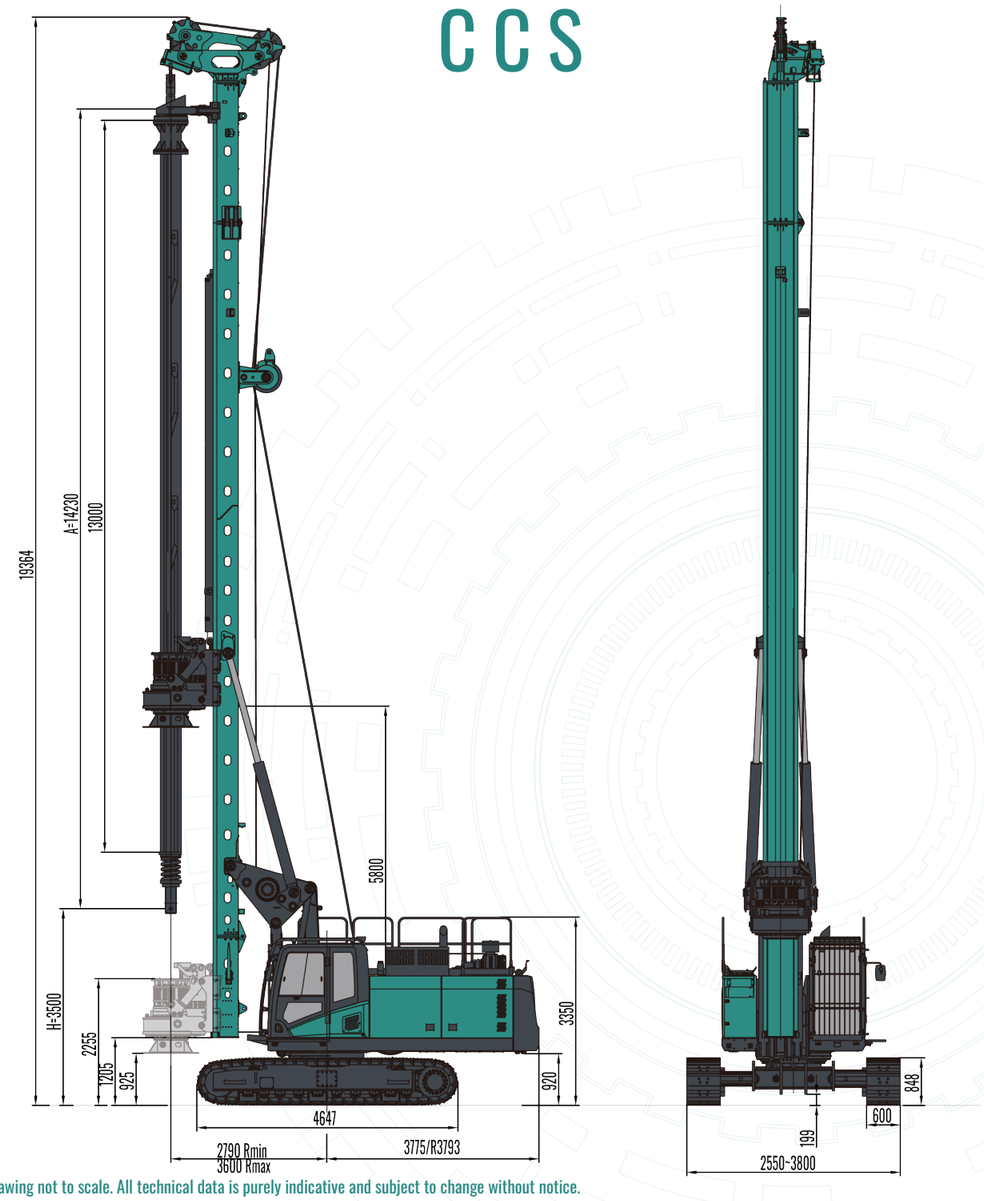

WCS

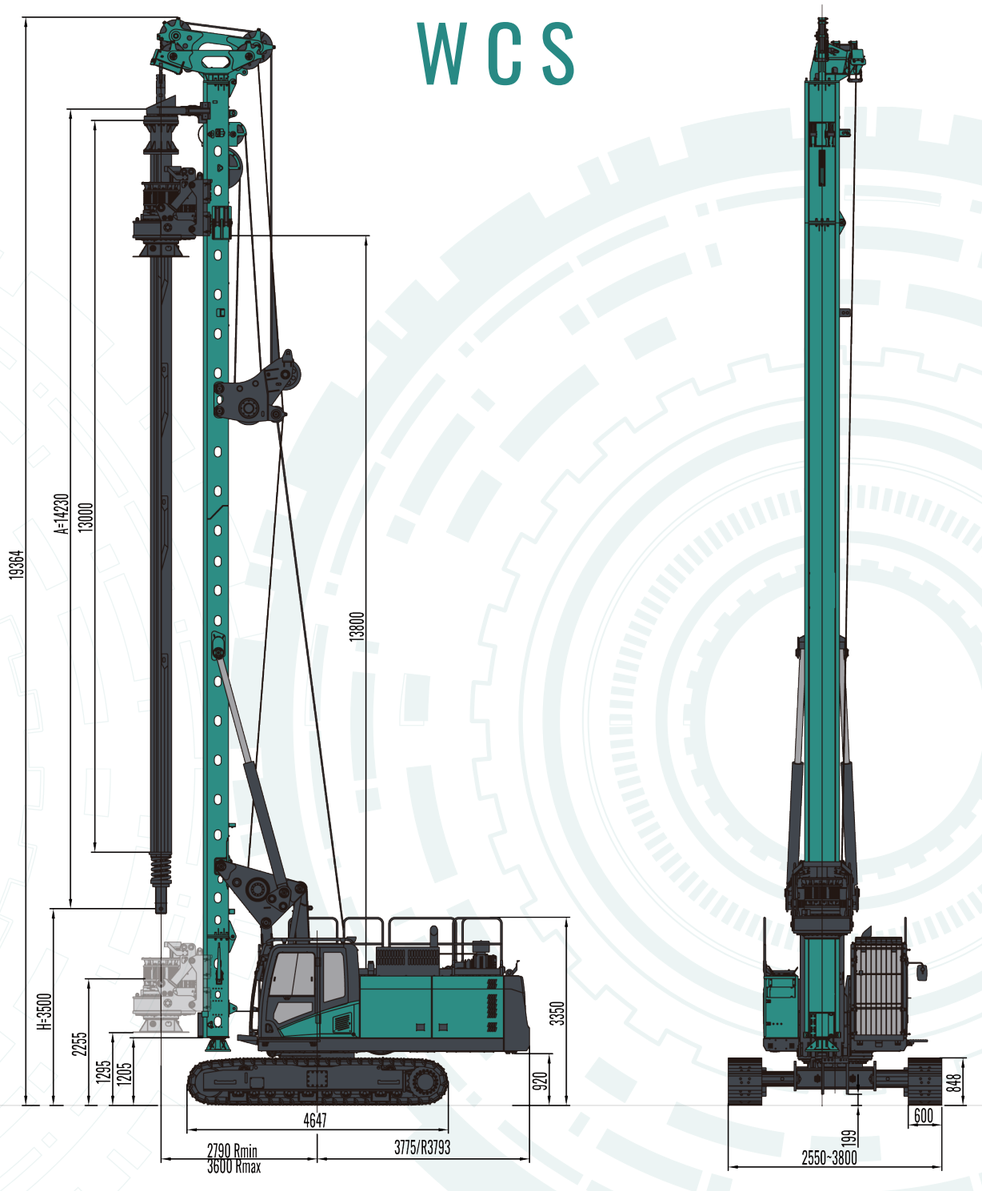

Drawing not to scale. All technical data is purely indicative and subject to change without notice.

SWDM165 DRILLING TOOLS INFORMATION

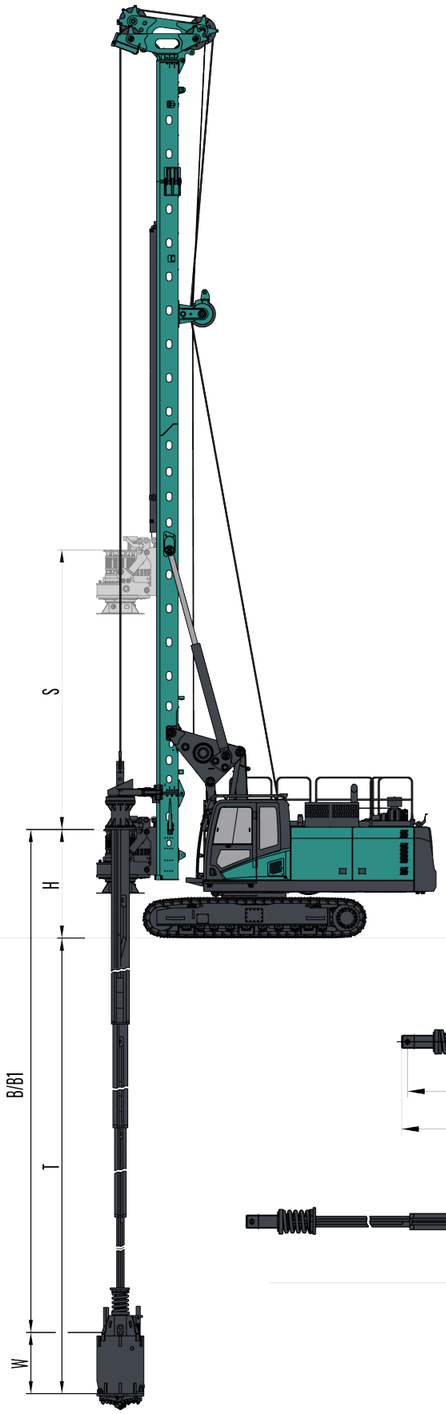

CALCULATION OF DRILLING DEPTH

S	STROKE OF CROWD SYSTEM
H	HEIGHT OF ROTARY DRIVE ABOVE GROUND LEVEL
W	LENGTH OF TOOL
B	LENGTH OF KELLY BAR FULLY EXTENDED. FRICTION
B1	LENGTH OF KELLY BAR FULLY EXTENDED. LOCKED
T	DRILLING DEPTH
T=B+W-H	MAX. DEPTH FRICTION KELLY BAR
T=B1+W-H	MAX. DEPTH LOCKED KELLY BAR

KELLY BAR

A	RETRACTED LENGTH
D	TRANSPORT LENGTH
⊠E	MAX. TRANSPORT DIAMETER
B	EXTENDED LENGTH
B1	EXTENDED LENGTH (LOCKED)

Kelly		A		B/B1		D		⊠E		Weight		Drilling depth		CCS H1		WCS H1	
Type	Dimension	mm	ft	mm	ft	mm	ft	mm	ft	kg	t(US)	m	ft	mm	ft	mm	ft
Locked	JS377-4X8.0m	9230	30.3	29006	95.2	9060	29.7	620	2.0	4610	5.1	27.9	91.6	6000	19.7	8500	27.9
Locked	JS377-4X9.0m	10230	33.6	33006	108.3	10060	33.0	620	2.0	5066	5.6	31.9	104.8	6000	19.7	7500	24.6
Locked	JS377-4X10.0m	11230	36.8	37006	121.4	11060	36.3	620	2.0	5521	6.1	35.9	117.9	6000	19.7	6500	21.3
Locked	JS377-4X11.0m	12230	40.1	41006	134.5	12060	39.6	620	2.0	5976	6.6	39.9	131.0	5500	18.0	5500	18.0
Locked	JS377-4X12.0m	13230	43.4	45006	147.7	13060	42.8	620	2.0	6431	7.1	43.9	144.1	4500	14.8	4500	14.8
Locked	JS377-4X13.0m	14230	46.7	49006	160.8	14060	46.1	620	2.0	6887	7.6	47.9	157.3	3500	11.5	3500	11.5
Friction	MZ377-5X8.0m	9230	30.3	36534	119.9	9060	29.7	620	2.0	4523	5.0	35.5	116.3	6000	19.7	8500	27.9
Friction	MZ377-5X9.0m	10230	33.6	41534	136.3	10060	33.0	620	2.0	4976	5.5	40.5	132.7	6000	19.7	7500	24.6
Friction	MZ377-5X10.0m	11230	36.8	46534	152.7	11060	36.3	620	2.0	5429	6.0	45.5	149.1	6000	19.7	6500	21.3
Friction	MZ377-5X11.0m	12230	40.1	51534	169.1	12060	39.6	620	2.0	5881	6.5	50.5	165.5	5500	18.0	5500	18.0
Friction	MZ377-5X12.0m	13230	43.4	56534	185.5	13060	42.8	620	2.0	6334	7.0	55.5	182.0	4500	14.8	4500	14.8
Friction	MZ377-5X13.0m	14230	46.7	61534	201.9	14060	46.1	620	2.0	6786	7.5	60.5	198.4	3500	11.5	3500	11.5

SWDM165 supports various drilling tools to meet construction site needs.

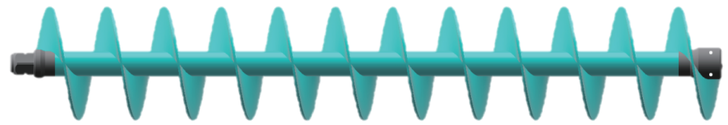

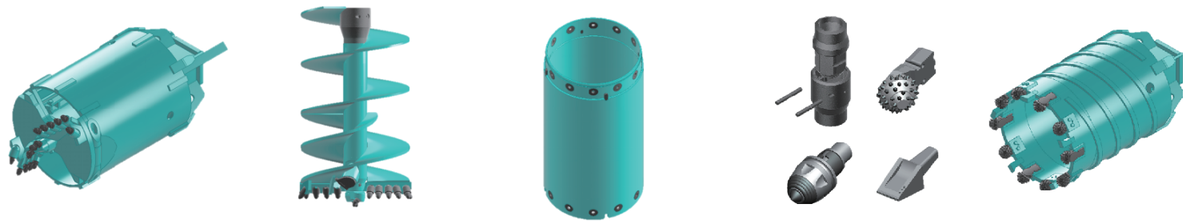





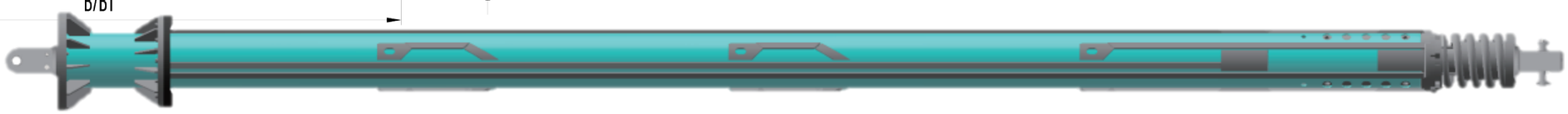

SWDM165 APPLICATIONS

CCS

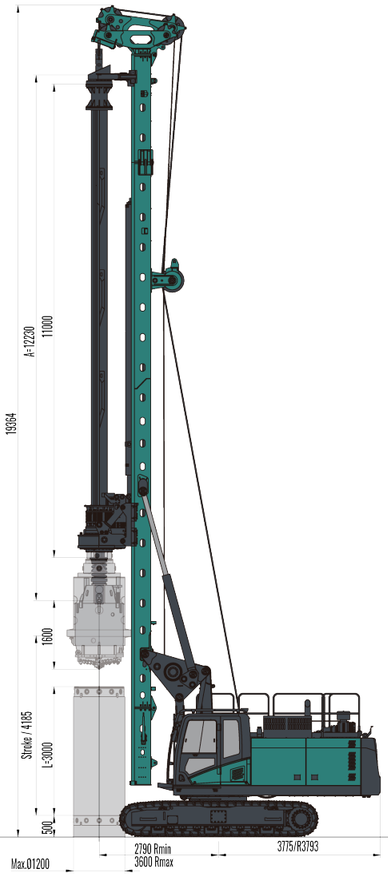

WCS

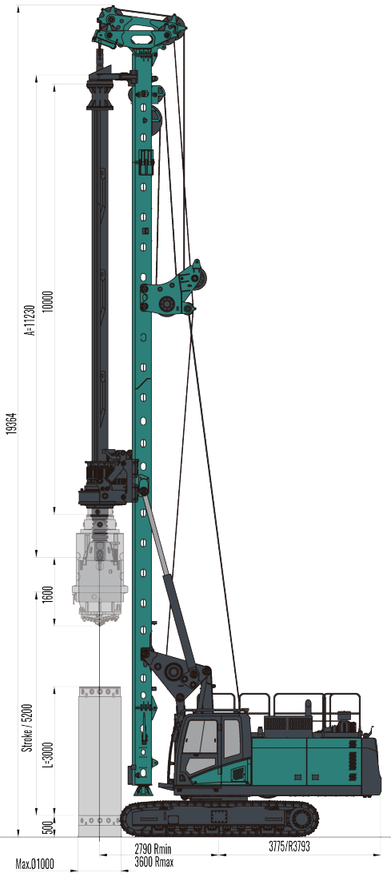

Cased Kelly Drilling

	Kelly Bar	Casing Length L	Casing Shoe Length L1	Sand Bucket Height L2
CCS	JS377-4x11m	3m	0.5m	1600mm
WCS	JS377-4x10m	3m	0.5m	1600mm

Drawing not to scale. All technical data is purely indicative and subject to change without notice.

4Times-CFA

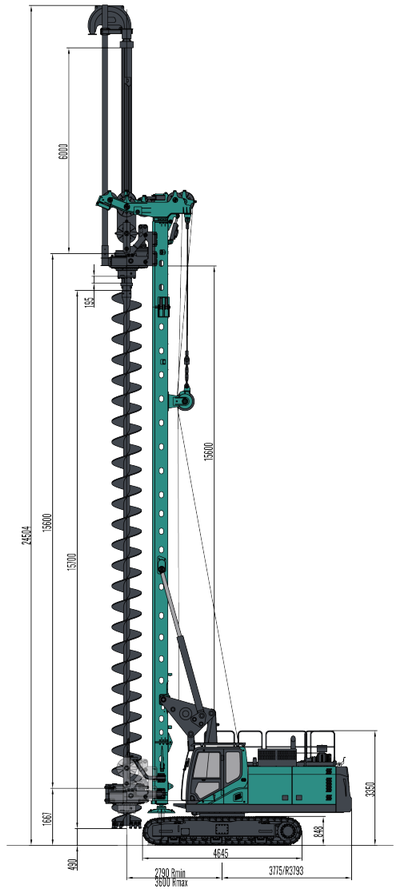

Quick Change CFA

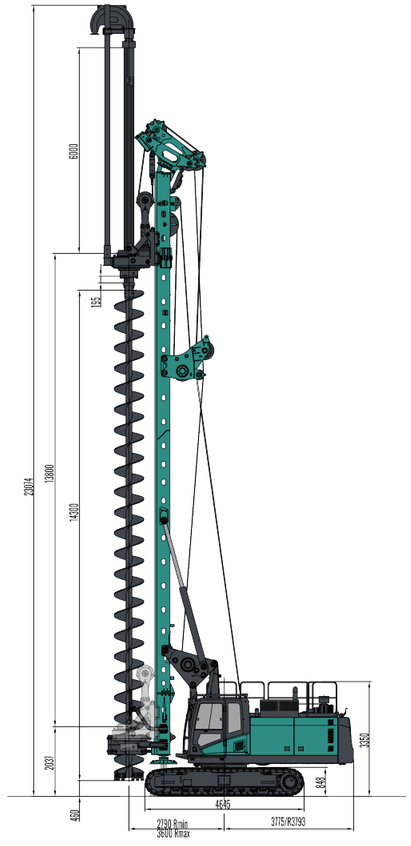

	Diam.(mm)	Without extension depth(m)	With extension depth(m)
CCS	D450-D800	14.8	20.8
WCS	D450-D800	13	19

Note: There may be slight variations depending on the specific geological conditions, subject to actual application scenarios.

SWDM165 TRANSPORT DATA

TRANSPORT

G = Weight B = Width, overall

CCS

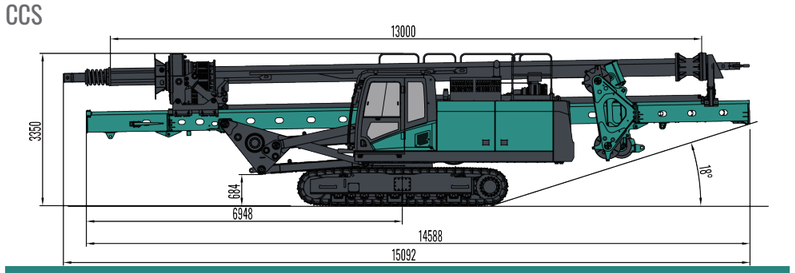

Note: G = 47t B = 2550mm Note: Above drawing using Kelly bar JS377-4X13m.

WCS

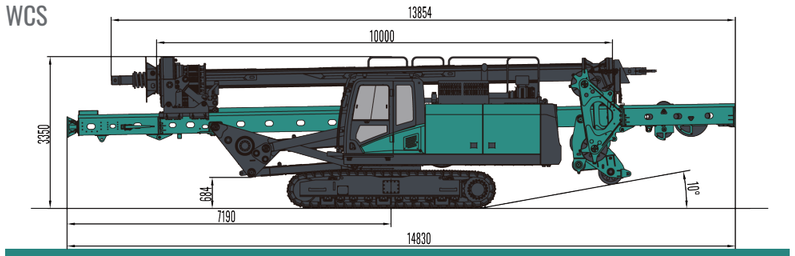

Note: G = 45.5t B = 2550mm Note: Above drawing using Kelly bar JS377-4X10m.

CCS+CFA

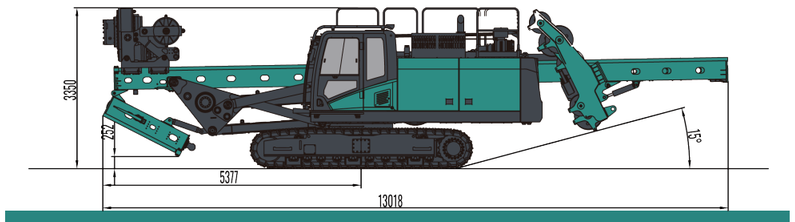

G =39.5t B = 2550mm

WCS+CFA

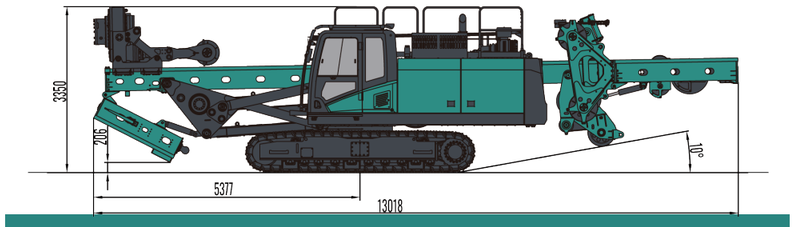

G =39.5t B = 2550mm

Drawing not to scale. All technical data are purely indicative and subject to change without notice.

REFERENCE



Transportability

SWDM165 is a 47-ton class machine including the Kelly bar designed for faster and efficient set up **on site, including low transport cost.**

SWDM ROTARY DRILLING RIGS RANGE OVERVIEW-PRO SERIES



SWDM85 SWDM135 SWDM165 SWDM215 SWDM245 SWDM325 SWDM415